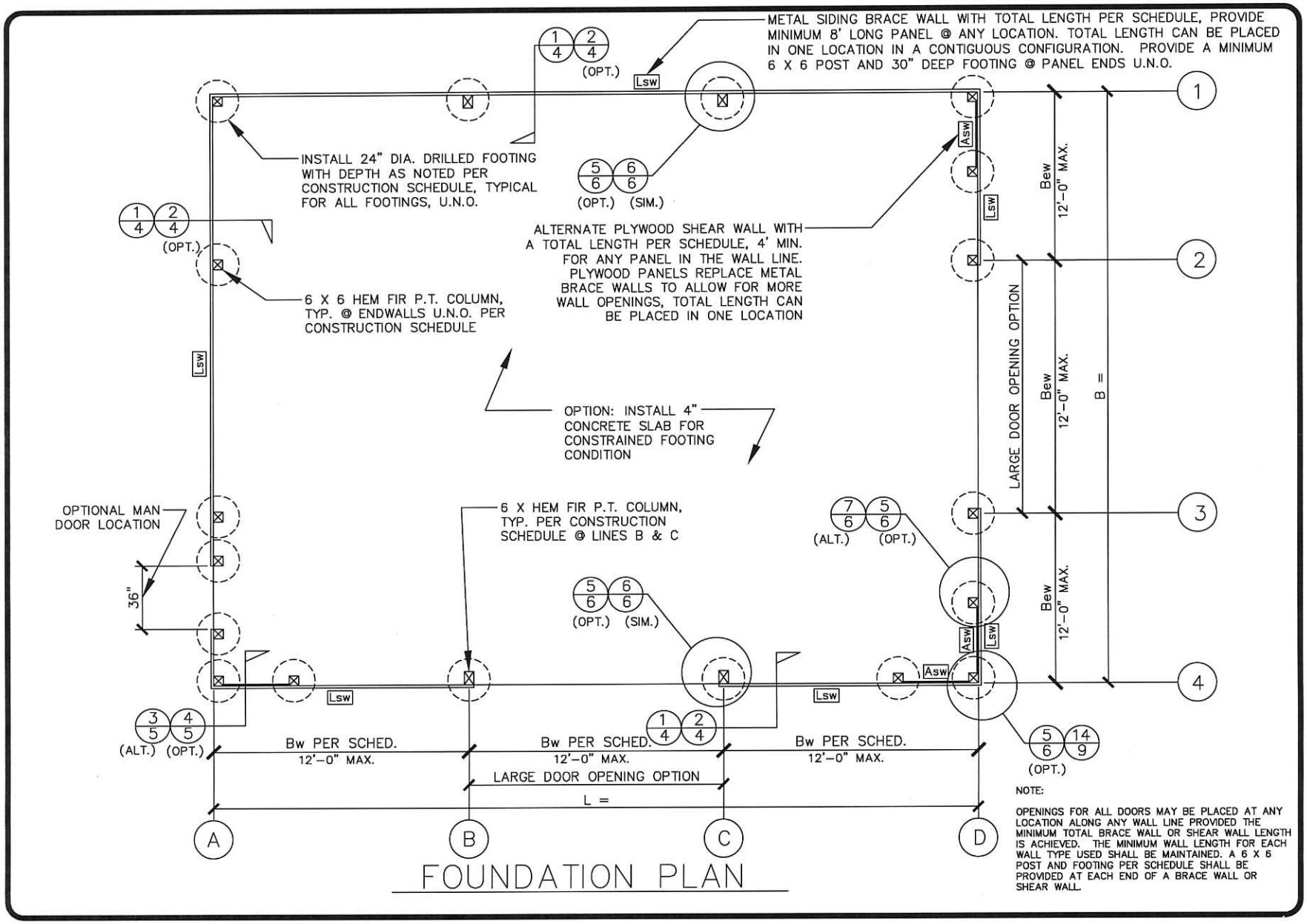

FOUNDATION PLAN

NOTE:

OPENINGS FOR ALL DOORS MAY BE PLACED AT ANY LOCATION ALONG ANY WALL LINE PROVIDED THE MINIMUM TOTAL BRACE WALL OR SHEAR WALL LENGTH IS ACHIEVED. THE MINIMUM WALL LENGTH FOR EACH WALL TYPE USED SHALL BE MAINTAINED. A 6 X 6 POST AND FOOTING PER SCHEDULE SHALL BE PROVIDED AT EACH END OF A BRACE WALL OR SHEAR WALL.

REVISIONS	
1	8/19/13
2	1/22/14

READY BUILD PLAN #2014-02
Prescriptive Post Frame Building
Code: 2014 OSSC, Seis. Design Cat.: D
Site Class: D, Snow: 25 PSF
Wind: 120 MPH, Exposure C

BUILDING CODES DIVISION
1535 EDGEWATER STREET, NW
P.O. BOX 14470
SALEM, OREGON 97309-0404
(503) 378-4133
FAX: (503) 378-2322

DRAWN	S W J
CHECKED	S W J
DATE	AUG. 2013
SCALE	N.T.S.
SHEET	1 OF 10

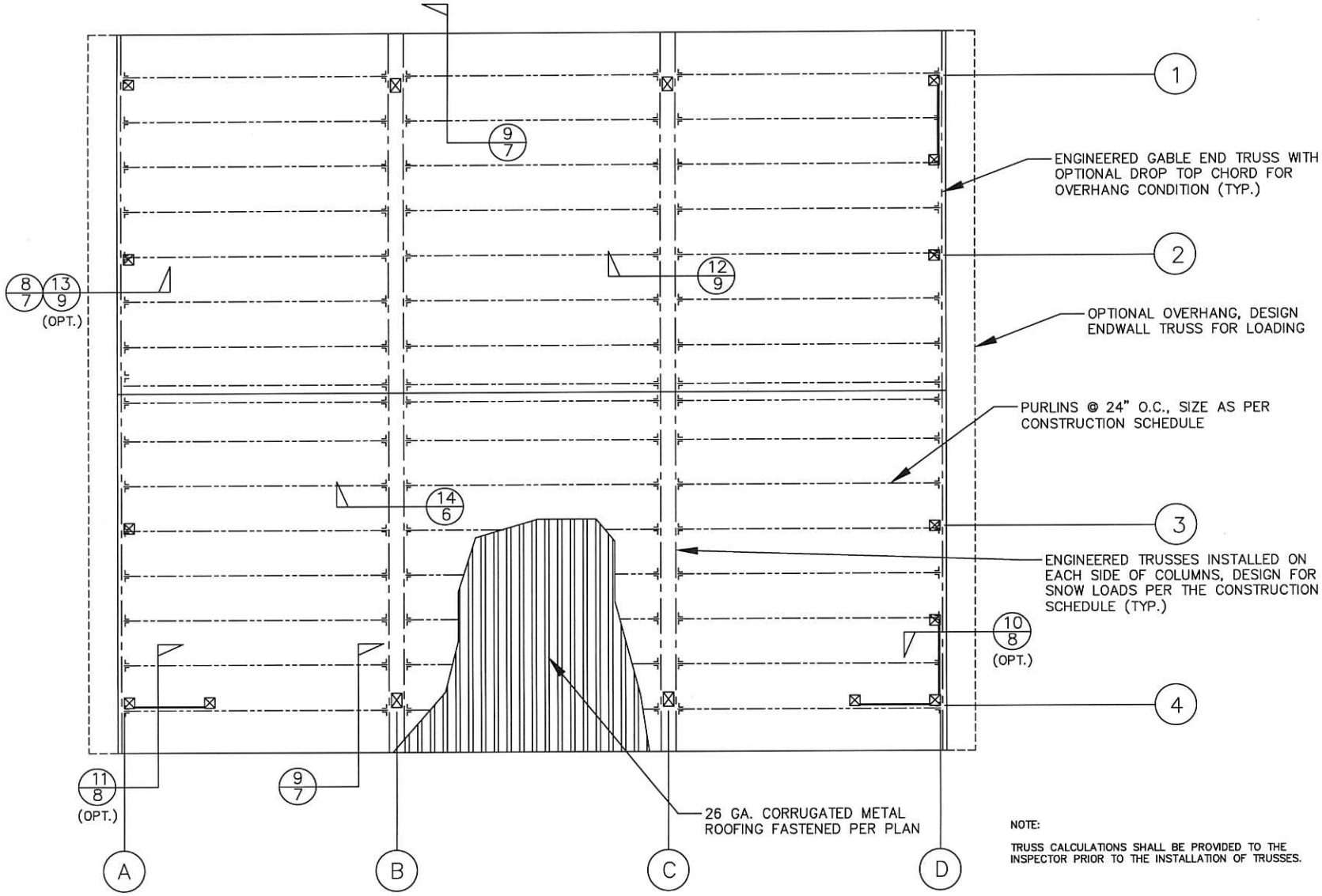

NOTE:

TRUSS CALCULATIONS SHALL BE PROVIDED TO THE INSPECTOR PRIOR TO THE INSTALLATION OF TRUSSES.

ROOF FRAMING PLAN

REVISIONS	
1	8/19/13
2	1/22/14

READY BUILD PLAN #2014-02
Prescriptive Post Frame Building
Code: 2014 OSSC, Seis. Design Cat.: D
Site Class: D, Snow: 25 PSF
Wind: 120 MPH, Exposure C

BUILDING CODES DIVISION
1535 EDGEWATER STREET, NW
P.O. BOX 14470
SALEM, OREGON 97309-0404
(503) 378-4133
FAX: (503) 378-2322

DRAWN	S W J
CHECKED	S W J
DATE	AUG. 2013
SCALE	N.T.S.
SHEET	2 OF 10

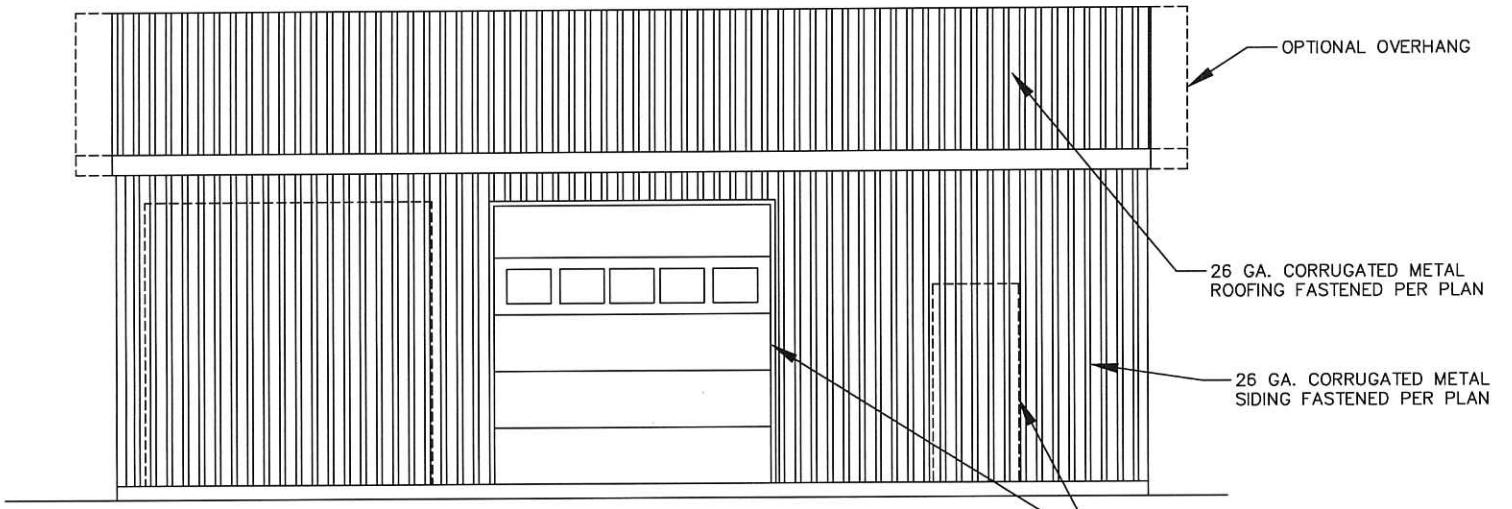

ROOF FRAMING PLAN

DENOTES OPTIONAL DOOR OPENINGS BASED ON BRACING METHOD USED PER PLAN AND CONSTRUCTION SCHEDULE

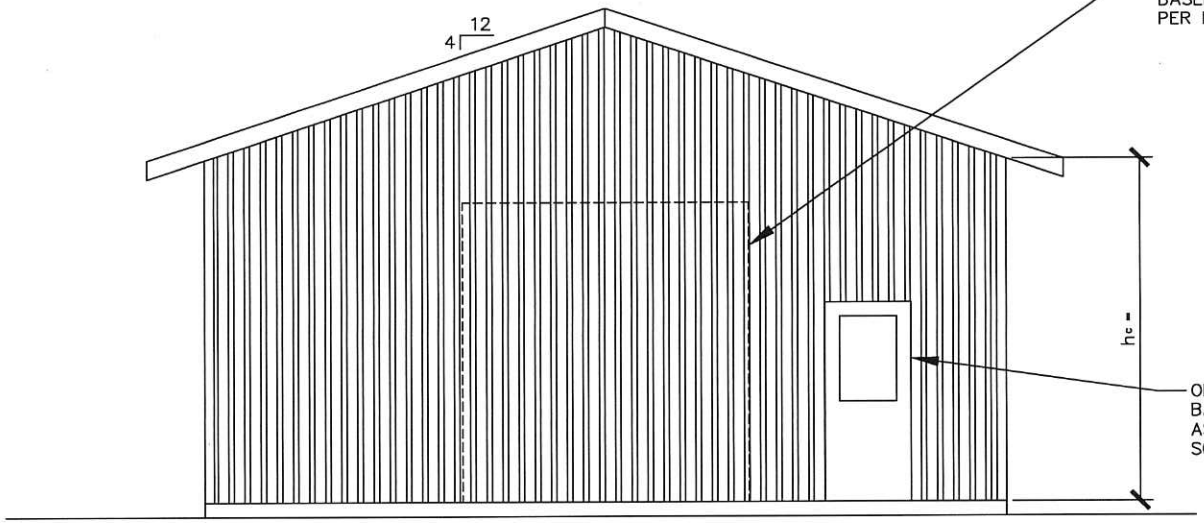

OPTIONAL MAN DOOR LOCATION BASED ON BRACE WALL LAYOUT AS ALLOWED PER CONSTRUCTION SCHEDULE

ROOF FRAMING PLAN

REVISIONS	
1	8/19/13
2	1/22/14

READY BUILD PLAN #2014-02
Prescriptive Post Frame Building
Code: 2014 OSSC, Seis. Design Cat.: D
Site Class: D, Snow: 25 PSF
Wind: 120 MPH, Exposure C

BUILDING CODES DIVISION
1535 EDGEWATER STREET, NW
P.O. BOX 14470
SALEM, OREGON 97309-0404
(503) 378-4133
FAX: (503) 378-2322

DRAWN	S W J
CHECKED	S W J
DATE	AUG. 2013
SCALE	N.T.S.
SHEET	3 OF 10

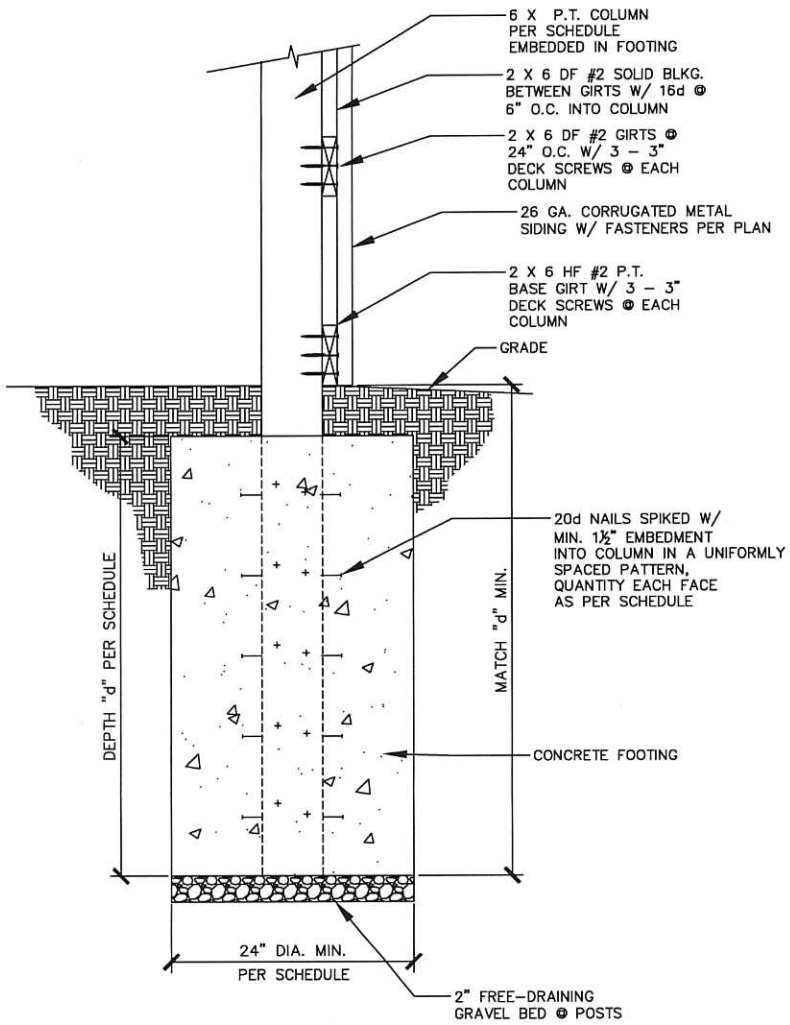

① TYPICAL NON–CONSTRAINED COLUMN FTG.

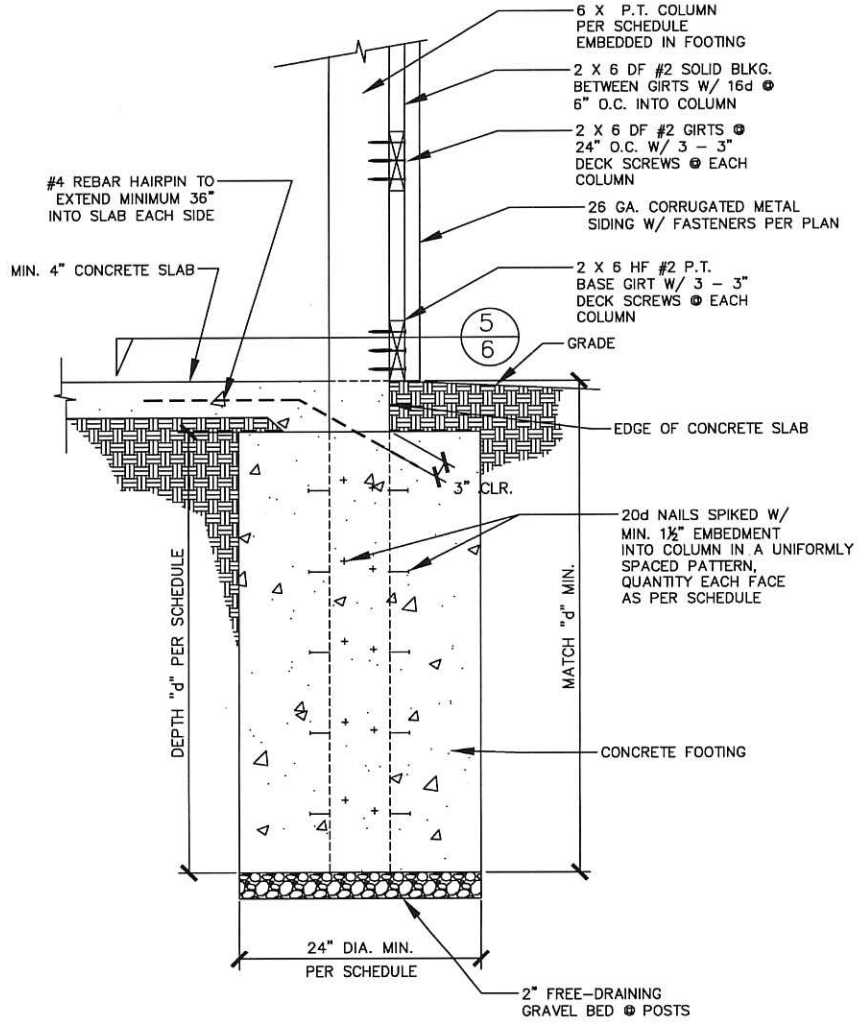

② TYPICAL CONSTRAINED COLUMN FTG.

REVISIONS	
1	8/19/13
2	1/22/14

READY BUILD PLAN #2014–02
Prescriptive Post Frame Building
Code: 2014 OSSC, Seis. Design Cat.: D
Site Class: D, Snow: 25 PSF
Wind: 120 MPH, Exposure C

BUILDING CODES DIVISION
1535 EDGEWATER STREET, NW
P.O. BOX 14470
SALEM, OREGON 97309-0404
(503) 378-4133
FAX: (503) 378-2322

DRAWN	S W J
CHECKED	S W J
DATE	AUG. 2013
SCALE	N.T.S.
SHEET	4 OF 10

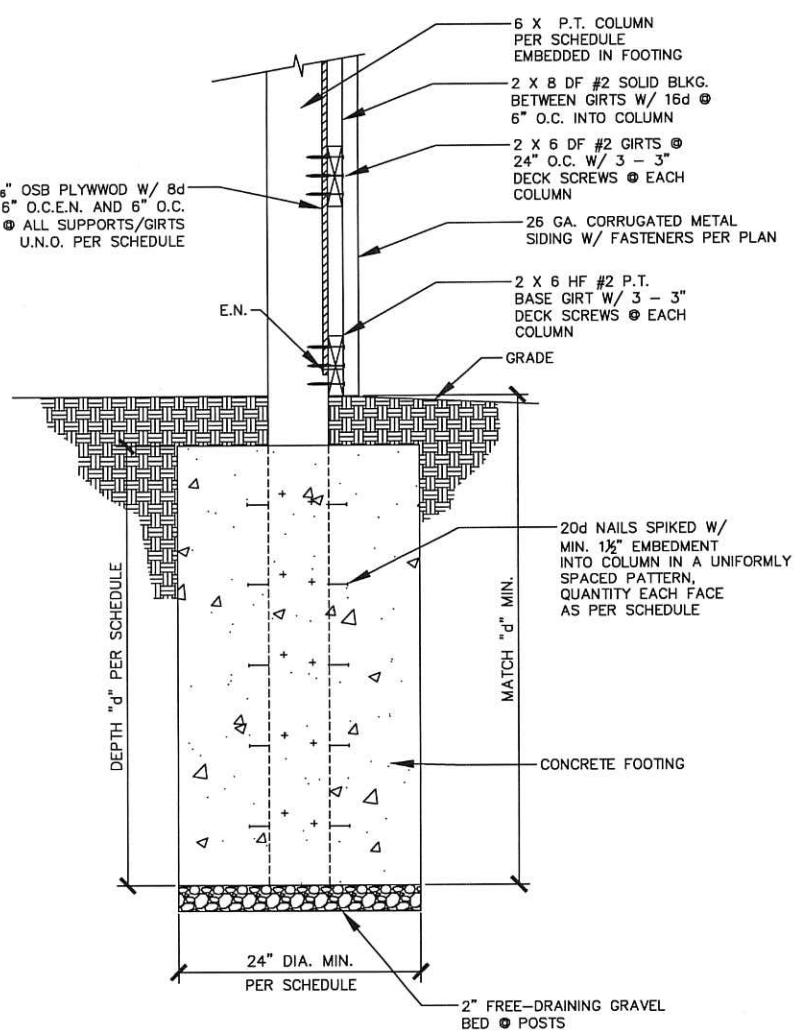

③ TYP. NON-CONSTRAINED COLUMN FTG. @ SHEAR WALL

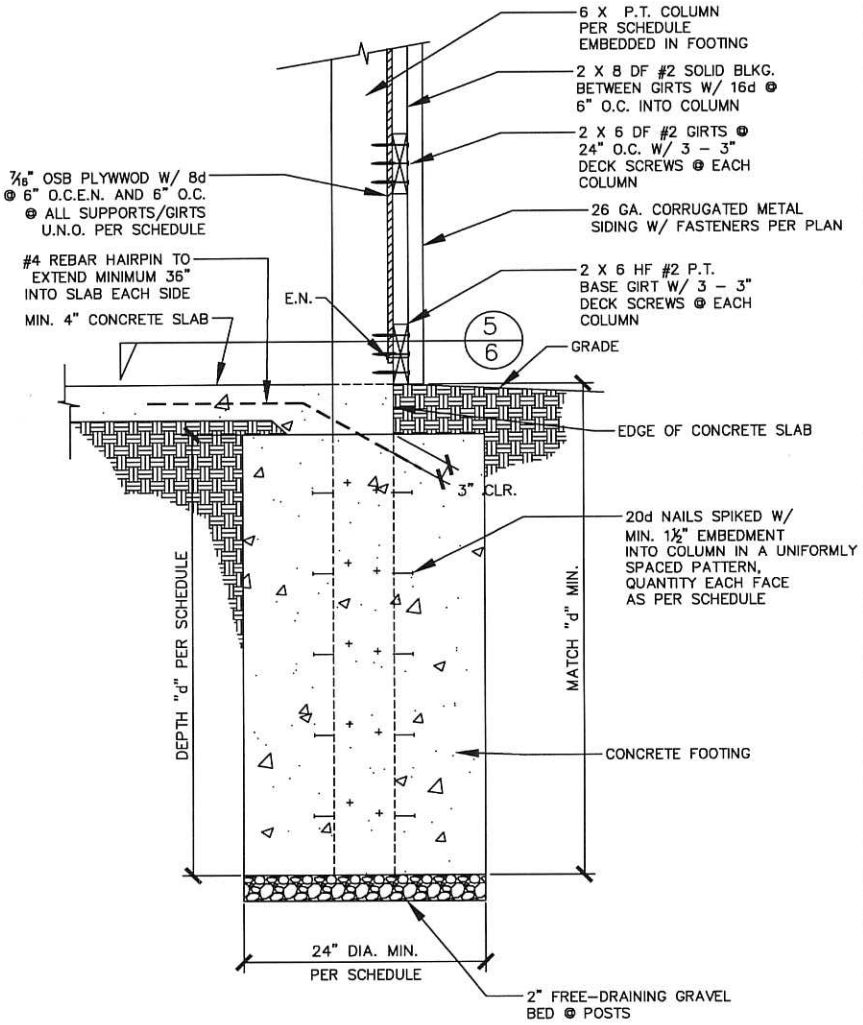

④ TYP. CONSTRAINED COLUMN FTG. @ SHEAR WALL

REVISIONS	
1	8/19/13
2	1/22/14

READY BUILD PLAN #2014-02
Prescriptive Post Frame Building
Code: 2014 OSSC, Seis. Design Cat.: D
Site Class: D, Snow: 25 PSF
Wind: 120 MPH, Exposure C

BUILDING CODES DIVISION
1535 EDGEWATER STREET, NW
P.O. BOX 14470
SALEM, OREGON 97309-0404
(503) 378-4133
FAX: (503) 378-2322

DRAWN	S W J
CHECKED	S W J
DATE	AUG. 2013
SCALE	N.T.S.
SHEET	5 OF 10

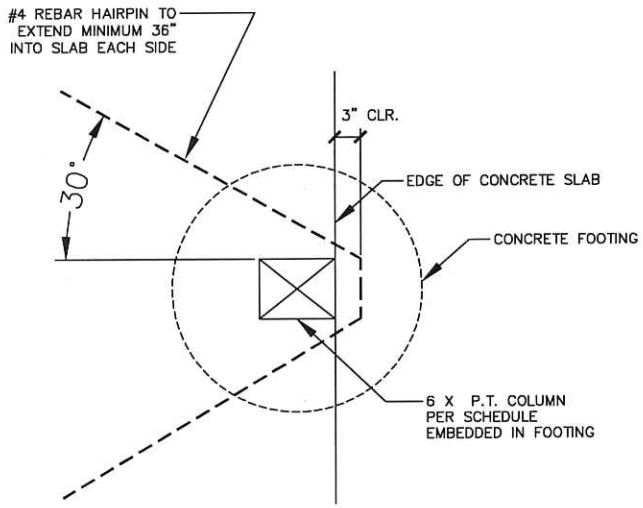

⑤ TYPICAL CONSTRAINED COLUMN FTG. HAIRPIN

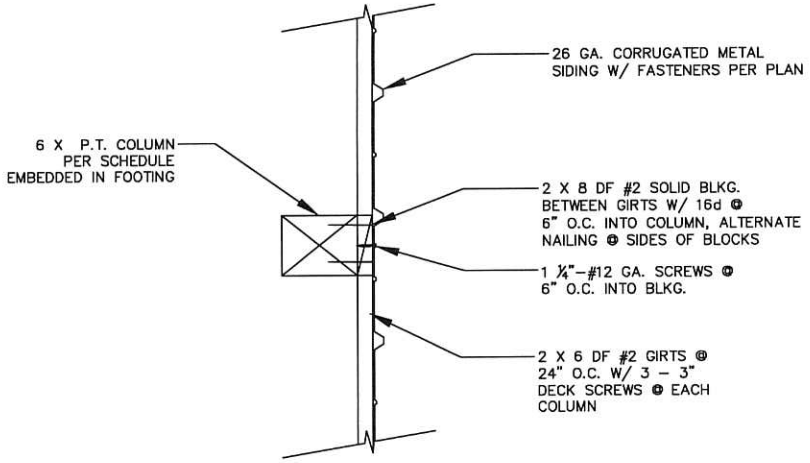

⑥ TYP. NAILER BLOCKING @ METAL SHEAR PANEL/COLUMNS

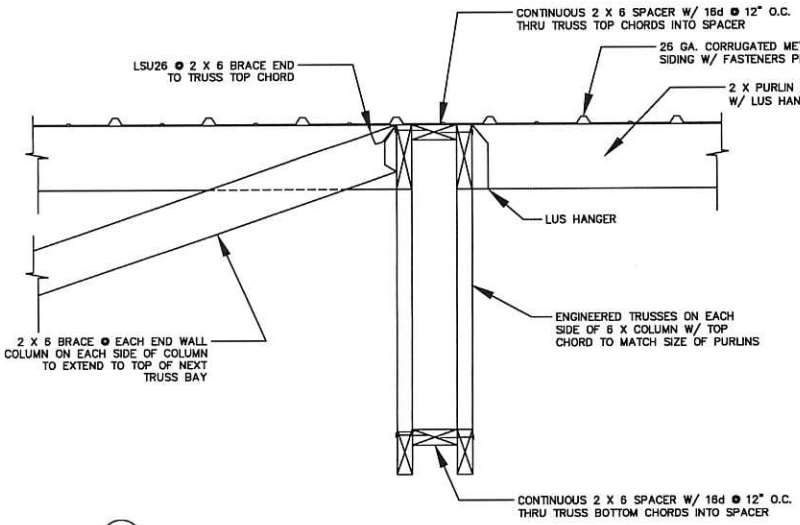

⑭ TYPICAL END COLUMN BRACING DETAIL

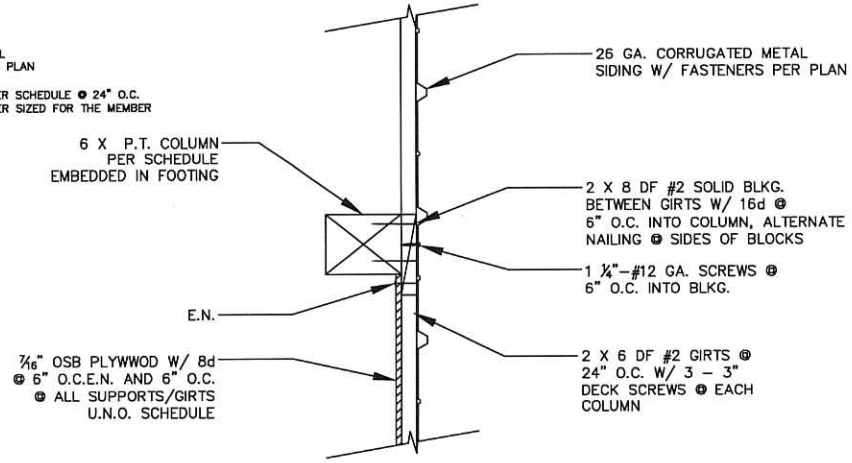

⑦ TYPICAL NAILER BLOCKING @ SHEAR PANEL/COLUMNS

REVISIONS	
1	8/19/13
2	1/22/14

READY BUILD PLAN #2014–02
Prescriptive Post Frame Building
Code: 2014 OSSC, Seis. Design Cat.: D
Site Class: D, Snow: 25 PSF
Wind: 120 MPH, Exposure C

BUILDING CODES DIVISION
1535 EDGEWATER STREET, NW
P.O. BOX 14470
SALEM, OREGON 97309-0404
(503) 378-4133
FAX: (503) 378-2322

DRAWN	S W J
CHECKED	S W J
DATE	AUG. 2013
SCALE	N.T.S.
SHEET	6 OF 10

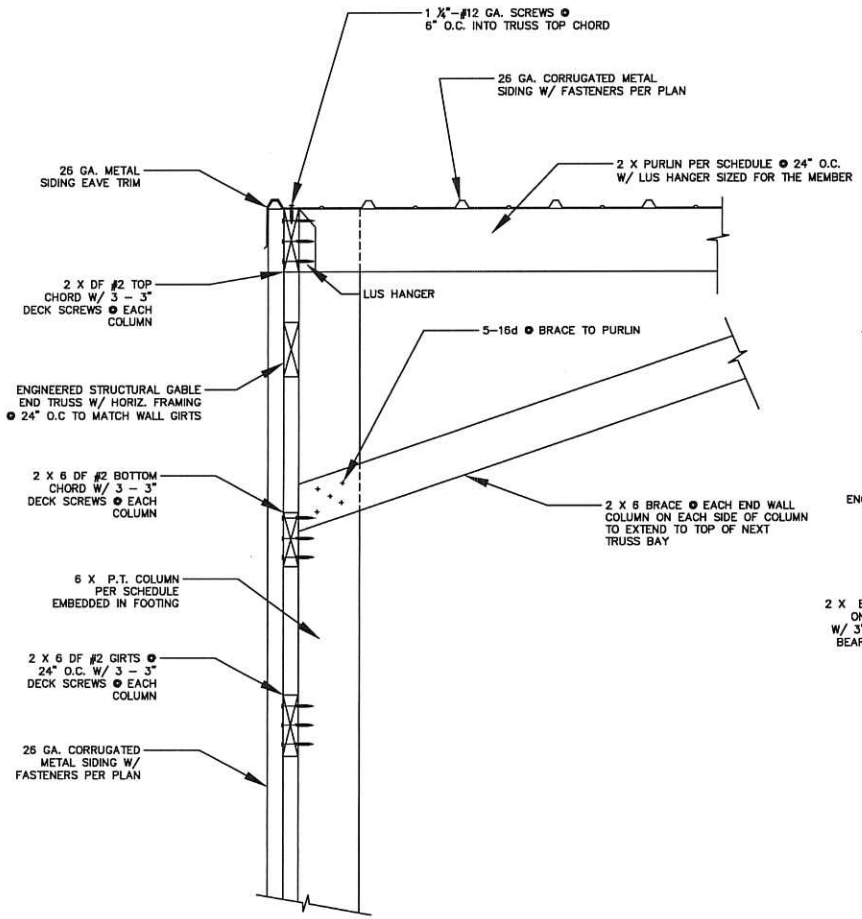

⑧ TYPICAL TRUSS/COLUMN/ENDWALL DETAIL

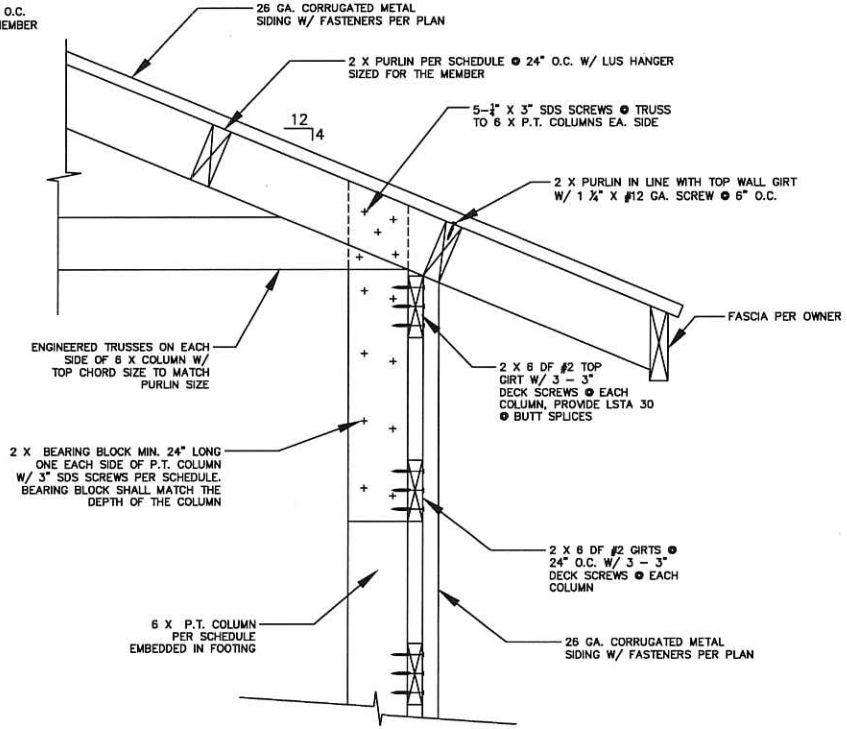

⑨ TYPICAL TRUSS/COLUMN/EAVE DETAIL

REVISIONS	
1	8/19/13
2	1/22/14

READY BUILD PLAN #2014–02
Prescriptive Post Frame Building
Code: 2014 OSSC, Seis. Design Cat.: D
Site Class: D, Snow: 25 PSF
Wind: 120 MPH, Exposure C

BUILDING CODES DIVISION
1535 EDGEWATER STREET, NW
P.O. BOX 14470
SALEM, OREGON 97309-0404
(503) 378-4133
FAX: (503) 378-2322

DRAWN	S W J
CHECKED	S W J
DATE	AUG. 2013
SCALE	N.T.S.
SHEET	7 OF 10

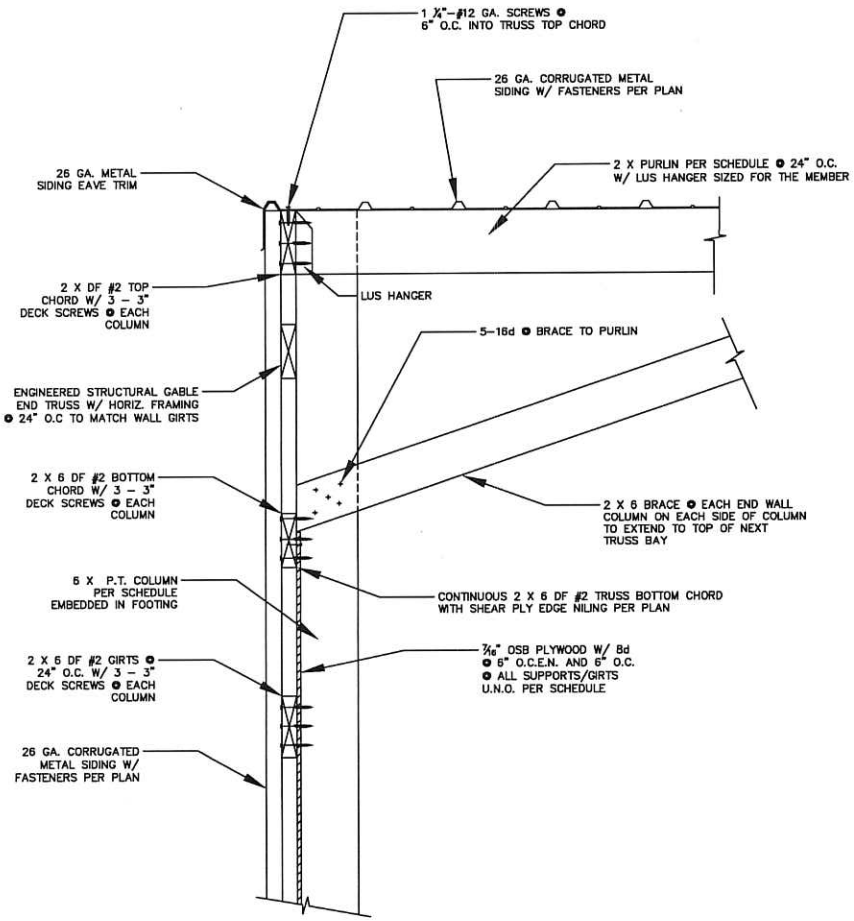

(10) TYP. TRUSS/COLUMN/ENDWALL @ SHEAR WALL

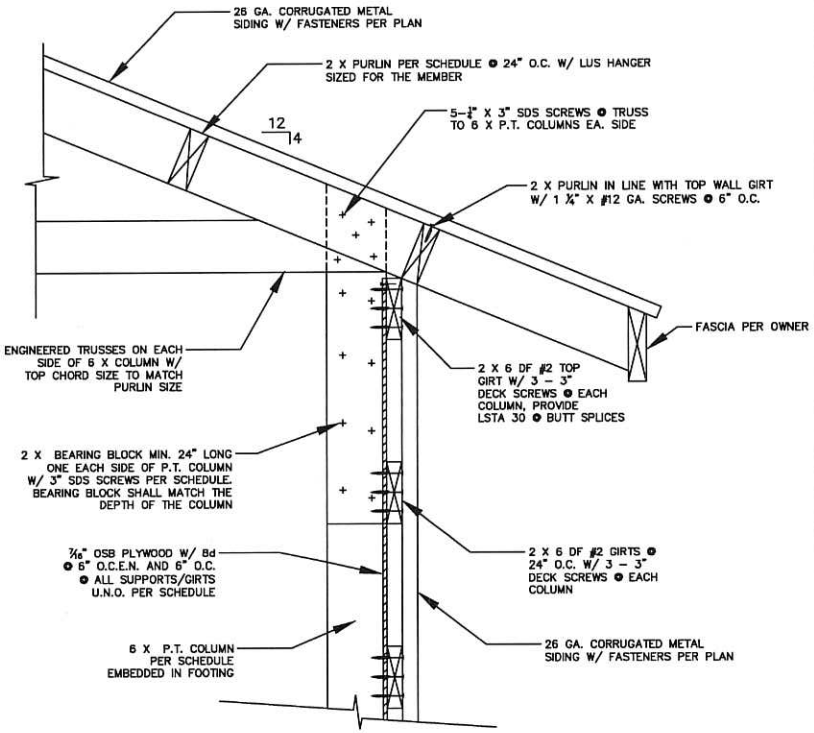

(11) TYP. TRUSS/COLUMN/EAVE @ SHEAR WALL

REVISIONS	
1	8/19/13
2	1/22/14

READY BUILD PLAN #2014–02
Prescriptive Post Frame Building
Code: 2014 OSSC, Seis. Design Cat.: D
Site Class: D, Snow: 25 PSF
Wind: 120 MPH, Exposure C

BUILDING CODES DIVISION
1535 EDGEWATER STREET, NW
P.O. BOX 14470
SALEM, OREGON 97309-0404
(503) 378-4133
FAX: (503) 378-2322

DRAWN	S W J
CHECKED	S W J
DATE	AUG. 2013
SCALE	N.T.S.
SHEET	8 OF 10

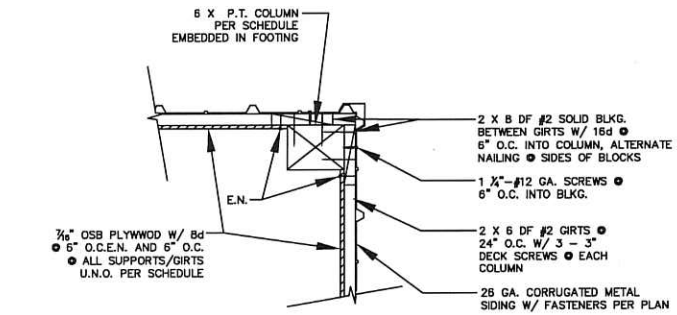

(14) TYP. NAILER BLOCKING @ SHEAR PANEL CORNERS

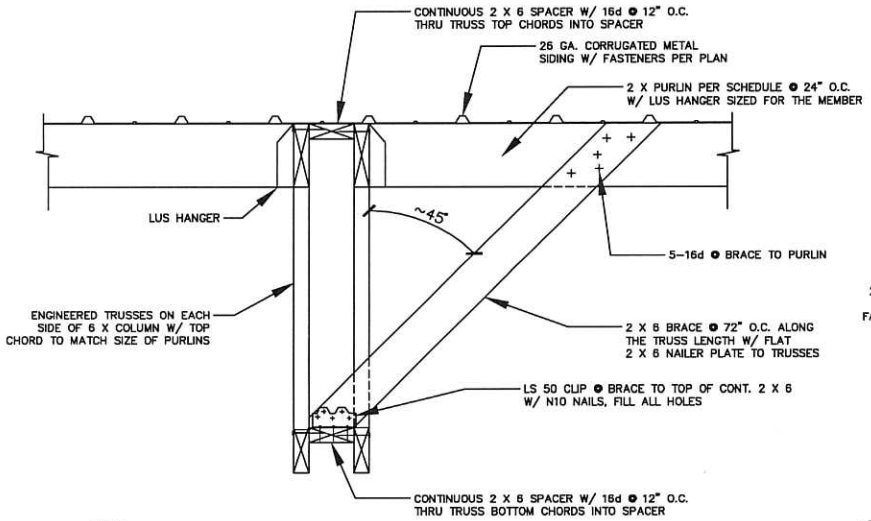

(12) TYPICAL TRUSS BRACING DETAIL

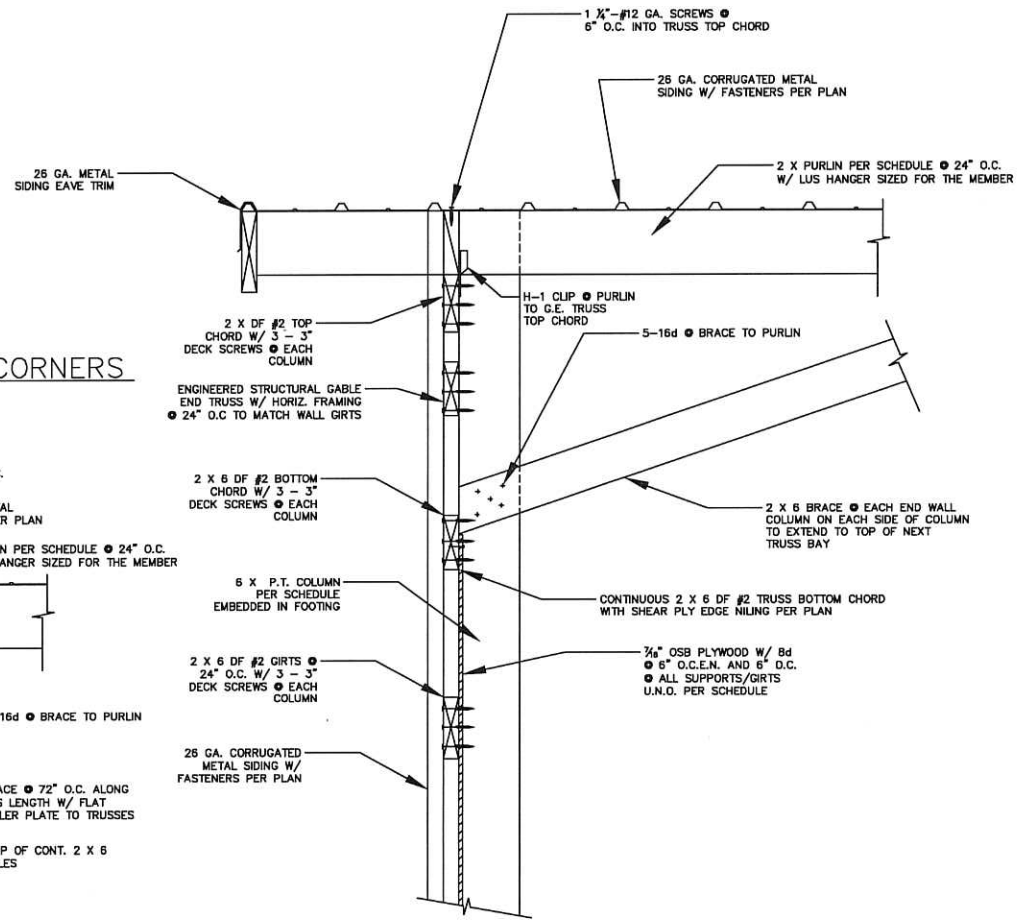

(13) TYP. TRUSS/COLUMN/ENDWALL W/ OVERHANG

REVISIONS	
1	8/19/13
2	1/22/14

READY BUILD PLAN #2014–02
Prescriptive Post Frame Building
Code: 2014 OSSC, Seis. Design Cat.: D
Site Class: D, Snow: 25 PSF
Wind: 120 MPH, Exposure C

BUILDING CODES DIVISION
1535 EDGEWATER STREET, NW
P.O. BOX 14470
SALEM, OREGON 97309-0404
(503) 378-4133
FAX: (503) 378-2322

DRAWN	S W J
CHECKED	S W J
DATE	AUG. 2013
SCALE	N.T.S.
SHEET	9 OF 10

CONSTRUCTION SCHEDULE BASED ON BUILDING SIZE

BUILDING SIZE B X L X hc EAVE	WIND SPEED (MPH)	SNOW LOAD (PSF)	BAY SPACING Bw	ENDWALL COL. SPACING Bew	COLUMN FRAME LINE B & C	COLUMN FRAME LINE A & D	OPENING EDGE COLUMNS	FOOTING ⊙ FRAME LINE B & C CONSTRAINED	FOOTING ⊙ FRAME LINE B & C NON-CONST.	20d NAILS EACH SIDE OF COLUMN ⊙ EMBEDS	FOOTING ⊙ FRAME LINE A & D CONSTRAINED	FOOTING ⊙ FRAME LINE A & D NON-CONST.	20d NAILS EACH SIDE OF COLUMN ⊙ EMBEDS	FOOTING ⊙ OPENING EDGE COLUMNS CONSTRAINED	FOOTING ⊙ OPENING EDGE COLUMNS NON-CONST.	20d NAILS EACH SIDE OF EDGE COLUMNS ⊙ EMBEDS
24' X 30' X 10' EAVE	120	20	10'	8'	6 X 8 HF #1	6 X 6 HF #1	4 X 6 HF #1	3'-6"	4'-8"	5	3'-3"	4'-4"	4	3'-3"	4'-4"	4
24' X 30' X 12' EAVE	120	20	10'	8'	6 X 8 HF #1	6 X 6 HF #1	6 X 6 HF #1	3'-8"	5'-0"	5	3'-6"	4'-6"	4	3'-6"	4'-6"	4
28' X 30' X 10' EAVE	120	20	10'	10'	6 X 8 HF #1	6 X 6 HF #1	4 X 6 HF #1	3'-6"	4'-9"	5	3'-3"	4'-4"	4	3'-3"	4'-4"	4
28' X 30' X 12' EAVE	120	20	10'	10'	6 X 8 HF #1	6 X 6 HF #1	6 X 6 HF #1	3'-8"	5'-0"	5	3'-6"	4'-6"	4	3'-6"	4'-6"	4
32' X 30' X 10' EAVE	120	20	10'	12'	6 X 8 HF #1	6 X 6 HF #1	4 X 6 HF #1	3'-9"	5'-3"	5	3'-4"	4'-4"	4	3'-4"	4'-4"	4
32' X 30' X 12' EAVE	120	20	10'	12'	6 X 8 HF #1	6 X 6 HF #1	6 X 6 HF #1	4'-0"	5'-6"	5	3'-6"	4'-6"	4	3'-6"	4'-6"	4
24' X 36' X 10' EAVE	120	20	12'	8'	6 X 8 HF #1	6 X 6 HF #1	4 X 6 HF #1	3'-6"	4'-9"	5	3'-3"	4'-4"	4	3'-3"	4'-4"	4
24' X 36' X 12' EAVE	120	20	12'	8'	6 X 8 HF #1	6 X 6 HF #1	6 X 6 HF #1	3'-8"	5'-0"	5	3'-6"	4'-8"	4	3'-6"	4'-8"	4
28' X 36' X 10' EAVE	120	20	12'	10'	6 X 8 HF #1	6 X 6 HF #1	4 X 6 HF #1	3'-6"	4'-9"	6	3'-3"	4'-4"	4	3'-3"	4'-4"	4
28' X 36' X 12' EAVE	120	20	12'	10'	6 X 8 HF #1	6 X 6 HF #1	6 X 6 HF #1	3'-9"	5'-3"	7	3'-4"	4'-6"	4	3'-4"	4'-6"	4
32' X 36' X 10' EAVE	120	20	12'	12'	6 X 8 HF #1	6 X 6 HF #1	4 X 6 HF #1	3'-6"	4'-9"	8	3'-3"	4'-4"	4	3'-3"	4'-4"	4
32' X 36' X 12' EAVE	120	20	12'	12'	6 X 8 HF #1	6 X 6 HF #1	6 X 6 HF #1	3'-8"	5'-0"	8	3'-6"	4'-6"	4	3'-6"	4'-6"	4

BUILDING SIZE B X L X hc EAVE	WIND SPEED (MPH)	SNOW LOAD (PSF)	BAY SPACING Bw	LINES 1 & 4 Lsw MINIMUM METAL SIDING BRACE WALL TOTAL LENGTH	LINES A & D Lsw MINIMUM METAL SIDING BRACE WALL TOTAL LENGTH	LINES 1 & 4 Asw MINIMUM ALTERNATE PLY SHEAR WALL TOTAL LENGTH	LINES A & D Asw MINIMUM ALTERNATE PLY SHEAR WALL TOTAL LENGTH	LINES 1 & 4 MINIMUM SHEAR PLY EDGE NAILING *	LINES A & D MINIMUM SHEAR PLY EDGE NAILING *	MINIMUM PURLIN SIZE ⊙ 24" O.C.	TRUSS REACTION ⊙ BEARING BLOCK (lbs.)	SDS SCREW THRU BEARING BLOCK TO COLUMN
24' X 30' X 10' EAVE	120	20	10'	8'-0"	18'-0"	4'-0"	8'-0"	6"	4"	2 X 6 DF #2	1500	3
24' X 30' X 12' EAVE	120	20	10'	10'-0"	20'-0"	8'-0"	8'-0"	6"	4"	2 X 6 DF #2	1500	3
28' X 30' X 10' EAVE	120	20	10'	10'-0"	18'-0"	6'-0"	8'-0"	4"	4"	2 X 6 DF #2	1750	3
28' X 30' X 12' EAVE	120	20	10'	14'-0"	20'-0"	8'-0"	10'-6"	6"	4"	2 X 6 DF #2	1750	4
32' X 30' X 10' EAVE	120	20	10'	14'-0"	18'-0"	6'-0"	8'-0"	4"	4"	2 X 6 DF #2	2000	5
32' X 30' X 12' EAVE	120	20	10'	18'-0"	20'-0"	8'-0"	10'-0"	4"	4"	2 X 6 DF #2	2000	5
24' X 36' X 10' EAVE	120	20	12'	8'-0"	18'-0"	4'-0"	8'-0"	6"	4"	2 X 8 DF #2	1500	3
24' X 36' X 12' EAVE	120	20	12'	10'-0"	20'-0"	4'-0"	10'-0"	4"	4"	2 X 8 DF #2	1500	3
28' X 36' X 10' EAVE	120	20	12'	10'-0"	20'-0"	6'-0"	8'-0"	6"	4"	2 X 8 DF #2	2100	6
28' X 36' X 12' EAVE	120	20	12'	14'-0"	24'-0"	6'-0"	12'-0"	4"	4"	2 X 8 DF #2	2100	6
32' X 36' X 10' EAVE	120	20	12'	14'-0"	20'-0"	6'-0"	8'-0"	4"	4"	2 X 8 DF #2	2400	7
32' X 36' X 12' EAVE	120	20	12'	16'-0"	24'-0"	8'-0"	12'-0"	4"	4"	2 X 8 DF #2	2400	7

* DENOTES 7/16" OSB PLYWOOD WITH 8d COMMON EDGE NAILING PER SCHEDULE AND 6" O.C. ⊙ ALL OTHER SUPPORTS. INSTALL PLYWOOD PRIOR TO SIDING, CLINCH NAILS PROTRUDING THROUGH BACK OF GIRTS

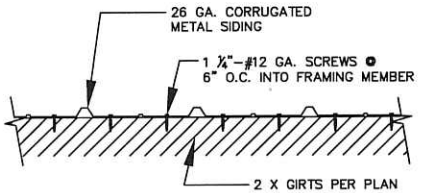

TYPICAL FASTENERS @ TOP & BASE GIRTS

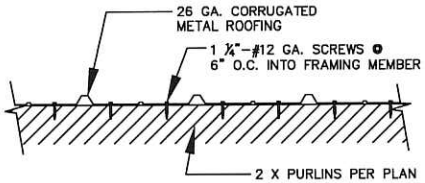

TYPICAL FASTENERS @ RIDGE & EAVE PURLINS

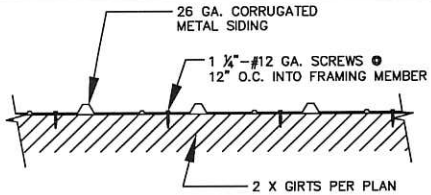

TYPICAL FASTENERS @ INTERMEDIATE GIRTS

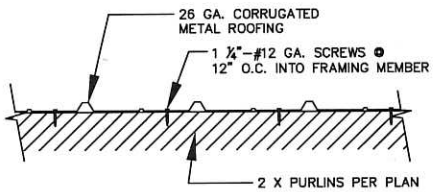

TYPICAL FASTENERS @ INTERMEDIATE PURLINS

DESIGN PARAMETERS

CODE: 2014 OREGON STRUCTURAL SPECIALTY CODE
SNOW: 25 PSF GROUND SNOW LOAD
WIND: 120 MPH EXPOSURE "C"
SEISMIC: DESIGN CATEGORY D2, SITE CLASS D

GENERAL CONSTRUCTION NOTES

1. ALL WOOD IN CONTACT WITH THE GROUND OR EMBEDDED IN CONCRETE SHALL BE CCA TREATED TO 0.60 RETENTION PER MANUFACTURER'S SPECIFICATIONS.
2. ALL SIDING AND ROOFING SHALL BE CORRUGATED METAL MINIMUM 26 GAUGE WITH A YIELD STRENGTH OF 80 KSI MINIMUM AND A 25 YEAR RATED COATING SYSTEM. ROOF SEAMS SHALL BE STITCHED TOGETHER IN ACCORDANCE WITH THE MANUFACTURER'S INSTRUCTIONS AND ANCHORED TO THE STRUCTURE AS NOTED ON THE PLANS.
3. ALL NAILS INTO TREATED WOOD SHALL BE HOT DIPPED GALVANIZED OR EQUAL.
4. CONCRETE SHALL HAVE A MINIMUM COMPRESSIVE STREENGTH OF 3,000 PSI AT THE 28 DAY TEST, SPECIAL INSPECTION IS NOT REQUIRED.
5. SOILS SHALL BE CLASS 4 OR BETTER IN ACCORDANCE WITH TABLE 1806.2 OF THE CURRENT OSSC & SHALL HAVE A MINIMUM 1,500 PSF BEARING CAPACITY & 150 PSF/FT LATERAL BEARING PRESSURE.
6. THE SUBJECT SITE FOR THE PLACEMENT OF THE STRUCTURE SHALL BE FLAT AND SHALL NOT HAVE FILL SOILS WITHIN THE FOOTPRINT OF THE BUILDING.
7. PROVIDE A MOISTURE BARRIER BETWEEN THE METAL CLADDING AND THE WOOD SUPPORTS.
8. ALL DECK SCREWS SHALL BE MINIMUM 8 GAUGE AND SHALL BE COATED FOR USE IN PRESSURE TREATED (P.T.) LUMBER. SDS SCREWS SHALL BE HOT-DIPPED GALVANIZED FOR USE IN P.T. LUMBER.

REVISIONS

1	8/19/13
2	1/22/14

READY BUILD PLAN #2014-02
Prescriptive Post Frame Building
Code: 2014 OSSC, Seis. Design Cat.: D
Site Class: D, Snow: 25 PSF
Wind: 120 MPH, Exposure C

BUILDING CODES DIVISION
1535 EDGEWATER STREET, NW
P.O. BOX 14470
SALEM, OREGON 97309-0404
(503) 378-4133
FAX: (503) 378-2322

DRAWN S W J
CHECKED S W J
DATE AUG. 2013
SCALE N.T.S.
SHEET 10 OF 10